KULLIYYAH OF ENGINEERING (KOE)

MECHATRONICS SYSTEM INTEGRATION (MCTA3203)

SEMESTER 1, 25/26

SECTION 1

PROJECT REPORT WEEK 7

TITLE: PLC Interfacing with Microcontroller and PC over Ethernet/IP

PREPARED BY :

NO	NAME	MATRIC NO
1	MUHAMMAD NAUFAL HAKIMI BIN IRWAN AFFANDI	2313041
2	MUHAMAD IQBAL BIN MD ISA	2313247
3	ADAM NABIL HANIFF BIN RUZAIMI	2313203

DATE OF SUBMISSION: 26/11/2025

ABSTRACT

This report details the design, implementation, and verification of a fundamental industrial control system, the Start-Stop control circuit, using a non-traditional Programmable Logic Controller (PLC) environment. The primary objective was to deploy IEC 61131-3 compliant Ladder Diagram (LD) logic onto an Arduino microcontroller utilizing the OpenPLC Editor and Runtime environment. The methodology involved creating an LD program featuring a latching (seal-in) circuit controlled by momentary Start and Stop inputs, which drove a physical LED output. The system successfully transitioned from an OFF state to a latched ON state upon activating the Start push button, and reliably returned to the OFF state upon activating the Stop push button. Data analysis confirmed that the Stop input provided overriding dominance over the Start input, demonstrating the critical safety feature of the circuit. The results validate the effectiveness of the OpenPLC framework for rapid, cost-effective prototyping and educational applications, successfully demonstrating the core principle of latching logic essential for industrial automation.

TABLE OF CONTENT

1.0 INTRODUCTION 2
2.0 MATERIALS AND EQUIPMENT 3
3.0 EXPERIMENTAL SETUP 4
4.0 METHODOLOGY 5
5.0 DATA COLLECTION 6
6.0 DATA ANALYSIS 7
8.0 DISCUSSION 8
9.0 CONCLUSION 9
10.0 RECOMMENDATIONS 9
11.0 REFERENCES 10
13.0 ACKNOWLEDGEMENT 13
14.0 STUDENTS DECLARATION 13

1.0 INTRODUCTION

Programmable Logic Controllers (PLCs) are essential components in modern industrial automation, providing robust and reliable control over electromechanical processes. Traditionally, PLCs are specialized hardware units, but software solutions like OpenPLC allow for the deployment of IEC 61131-3 standard programming languages, such as Ladder Diagram (LD), onto conventional microcontrollers like the Arduino. This approach bridges the gap between industrial control methods and low-cost embedded systems, offering a valuable platform for learning and rapid prototyping.

The objective of this laboratory experiment is to design, implement, and test a fundamental industrial control concept(the Start-Stop control circuit) using the OpenPLC Editor and an

Arduino microcontroller. This circuit is characterized by its latching behavior, where a momentary 'Start' input turns an output (such as an LED) on and keeps it on until a separate momentary 'Stop' input turns the output off. Successful implementation and testing of this circuit will demonstrate proficiency in developing and deploying PLC logic, managing input/output (I/O) physical addressing, and integrating software and hardware components for automated control.

2.0 MATERIALS AND EQUIPMENT

The following hardware and software components were required to complete the experiment:

Software:

- OpenPLC

Hardware:

Item	Quantity	Function
Ct Uno board	1	Used as the target device for the PLC runtime environment
Push Button Switch	2	Momentary switches used for ‘Start’ and ‘Stop’ inputs.
Red LED	1	Serves as the load indicator for the circuit’s output
Resistor (10k ohm)	3	Limit current going into push button and LED
Jumper Wire	As much as needed	For making electrical connections on the breadboard
Breadboard	1	For assembling the physical circuit
USB Cable	1	To connect the Arduino board to the PC for programming and power

3.0 EXPERIMENTAL SETUP

The experiment was configured using a dual-component setup: a software environment for PLC programming and a physical circuit for hardware interaction.

3.1. Software Setup

1. OpenPLC Editor: The OpenPLC Editor software was downloaded and installed on a personal computer (PC) to serve as the development environment.

2. Project Creation: A new project was initiated within the editor, selecting LD (Ladder Diagram) as the programming language.

3. Variable Specification: The following variables were declared and mapped to physical I/O addresses on the Arduino:

- UP_Start: Input variable, mapped to physical address %IX0.0 (Digital Pin 2 on Arduino Uno).
- DOWN_Stop: Input variable, mapped to physical address %IX0.1 (Digital Pin 3 on Arduino Uno).
- LED: Output variable, mapped to physical address %QX0.0 (Digital Pin 7 on Arduino Uno).
- Latch: Internal BOOL variable (no physical I/O mapping required).

Description: Class Filter: All

#	Name	Class	Type	Location	Initial Value	Option	Documentation
1	led	Local	BOOL	%QX0.0			
2	UP_Start	Local	BOOL	%IX0.0			
3	DOWN_Stop	Local	BOOL	%IX0.1			
4	latch	Local	BOOL				

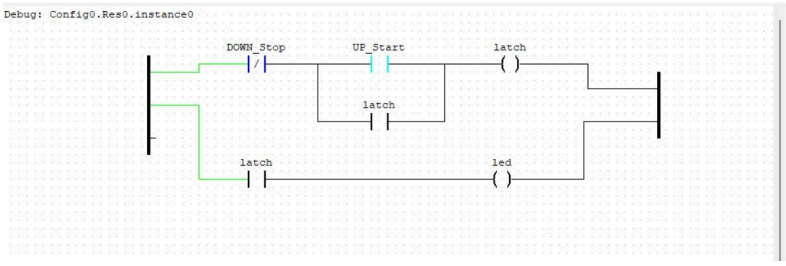

3.2. Physical Hardware Setup

The physical circuit was constructed on a breadboard using the CT Uno as the central controller, following the schematic provided in the lab material.

- Input Circuit: Two push button switches, PB1 (Start) and PB2 (Stop), were connected between the 5V rail and their respective Arduino digital input pins (Pin 2 and Pin 3). A 10k ohm pull-down resistor was connected from each input pin to Ground (GND) to ensure a defined low state when the buttons are not pressed.

- Output Circuit: A red LED was connected from Arduino Digital Pin 7, through a 10k ohm current limiting resistor, to the Ground (GND) rail.

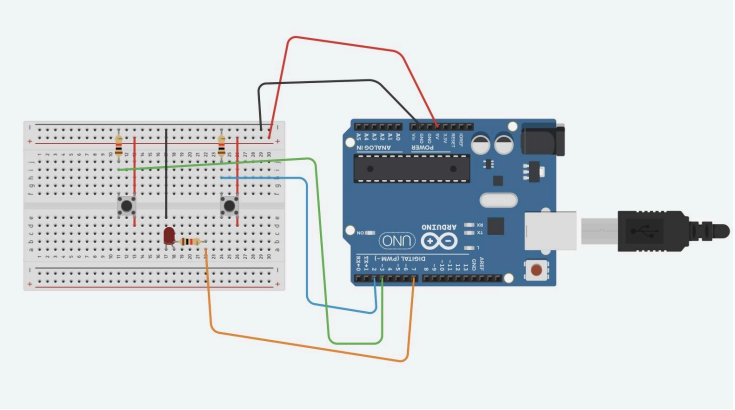

4.0 METHODOLOGY

The experiment was conducted in the following seven sequential steps, moving from program development and simulation to hardware deployment and functional testing.

1. Ladder Diagram Development: The Start-Stop control logic was created in the OpenPLC Editor as a Ladder Diagram (Fig above under experimental setup). This involved:

- A control rung using a Negated Contact for DOWN_Stop in series with the Parallel combination of a Contact for UP_Start and a Latching Contact for Latch.
- A Coil for the Latch variable was placed at the end of the first rung.
- A second rung was created to energize the output, consisting of a Contact for Latch in series with the Coil for LED.

2. Variable Association: All variables (UP_Start, DOWN_Stop, LED, Latch) were specified in the editor, and the I/O variables were correctly associated with the board physical addresses (%IX0.0, %IX0.1, %QX0.0) corresponding to Pins 2, 3, and 7, respectively.

3. Simulation: The created Ladder Diagram was compiled and simulated within the OpenPLC Editor to verify the logical behavior (latching on Start, unlatching on Stop) before deployment.

4. Hardware Assembly: The physical circuit (Fig. 4/6 in the lab document) was meticulously assembled on the breadboard, ensuring correct polarity for the LED and proper placement of the pull-down and current-limiting resistors.

5. Program Transfer: The CT board was connected to the PC via USB. The compiled Ladder Diagram program was uploaded to the board by selecting the correct board type and COM port number in the OpenPLC transfer dialogue.

6. Functional Testing: Once the program was successfully transferred, the physical circuit's functionality was tested:

- The Start push button (PB1, mapped to %IX0.0) was momentarily pressed. The LED was observed to turn ON and remain ON (latch).
- The Stop push button (PB2, mapped to %IX0.1) was momentarily pressed. The LED was observed to turn OFF (unlatch).

7. Documentation: Observations from both the software simulation and the hardware testing phases were recorded for final analysis and reporting.

5.0 DATA COLLECTION

The experiment focused on validating the sequential and latching behavior of the PLC-implemented Start-Stop control circuit. Data was collected by observing the state of the output (LED) in response to changes in the momentary inputs (Start and Stop push buttons). The states are represented as TRUE (1) for an active signal (button pressed or LED ON) and FALSE (0) for an inactive signal (button released or LED OFF).

Step	Action	UP_Start (%IX0.0)	DOWN_Stop (%IX0.1)	Latch	LED (%QX0.0)	Observation
1	Initial state (no button pressed)	0	0	0	0	LED is OFF
2	Press Start button (PB1)	1	0	1	1	LED turns ON
3	Release Start (PB1)	0	0	1	1	LED remains ON (latched)
4	Press Stop (PB2)	0	1	0	0	LED turns off
5	Release Stop	0	0	0	0	LED remains OFF
6	Press Start when Stop is held (PB1 and PB2 together)	1	1	0	0	LED remains OFF. Stop input overrides Start.

6.0 DATA ANALYSIS

The experimental results perfectly validated the functionality of the Start-Stop control circuit as implemented using the OpenPLC Ladder Diagram (LD). The circuit's behavior is dictated by the principles of latching logic, which is crucial for maintaining an output state after a momentary input has ceased.

The Ladder Diagram (Fig. 5 in the lab document) consists of two rungs:

1. Latching Rung (Control Rung): This rung controls the internal Latch variable. The logic required the series combination of a Normally Closed (NC) Contact controlled by DOWN_Stop and a parallel branch containing the Normally Open (NO) Contact controlled by UP_Start and the NO Contact of the Latch itself (the seal-in contact). This rung energizes the Latch output coil.

- Start Operation (Step 2 & 3): When UP_Start is pressed (TRUE), power flows through the NC DOWN_Stop contact and the NO UP_Start contact, energizing the Latch coil. Once the Latch coil is energized, its associated NO contact in the parallel branch closes (seals in). When UP_Start is released (FALSE), the circuit maintains continuity through the now-closed Latch contact, keeping the coil energized. This is the definition of the latching function.
- Stop Operation (Step 4 & 5): The NC DOWN_Stop contact is located at the beginning of the logic path. When DOWN_Stop is pressed (TRUE), the NC contact opens, instantly breaking the power path to the Latch coil. This de-energizes the Latch coil, causing its seal-in contact to open, and the entire circuit resets to the initial condition, regardless of the state of the UP_Start contact.
- Override Function (Step 6): Placing the DOWN_Stop in series at the start of the rung ensures its dominance. If both buttons are pressed simultaneously, the open state of the DOWN_Stop NC contact overrides the closed state of the UP_Start NO contact, preventing the Latch from energizing. This is a critical safety feature in industrial control.

2. Output Rung: This simple rung uses the state of the Latch internal coil to control the physical output, the LED. It consists of a NO Contact controlled by Latch in series with the LED output coil.

- As confirmed by the data, the LED state (%QX0.0) is always identical to the Latch state: Latch = TRUE means LED = ON, and Latch = FALSE means LED = OFF. This demonstrates the successful isolation and subsequent activation of the physical output based on the established control logic.

The experiment successfully verified that the Arduino, running the OpenPLC Runtime, accurately executed the IEC 61131-3 standard Ladder Diagram logic, effectively acting as a true PLC for the implementation of the essential Start-Stop control function.

7.0 RESULTS

The Start-Stop control circuit was successfully implemented using the OpenPLC environment and the CT Uno microcontroller. The LED output responded exactly as predicted by the Ladder Diagram logic. During testing, the following key results were observed:

- Pressing the **Start** push button momentarily caused the LED to turn **ON** and remain latched even after the button was released.
- Pressing the **Stop** push button at any time immediately caused the LED to turn **OFF**, breaking the latch and returning the system to its initial state.
- Simultaneous pressing of both buttons showed that the **Stop** command had priority, preventing the latch from energizing and keeping the LED OFF.
- The software simulation and physical hardware test results were fully consistent with each other, demonstrating correct mapping between logical variables and physical I/O.

These results confirm that the PLC logic and physical wiring were correctly configured to perform the intended industrial control function

8.0 DISCUSSION

The results of the experiment clearly demonstrate that the Start–Stop control circuit developed using OpenPLC functioned exactly as intended. When the ladder logic was simulated in the software, the behaviour of the Start and Stop inputs matched the expected industrial control sequence, and this same behaviour was successfully replicated when the program was uploaded to the Arduino. The latching mechanism played a crucial role in maintaining the LED output even after the Start button was released, confirming that the logic was correctly designed and that the virtual holding contact operated effectively. The Stop button reliably interrupted the latch, immediately turning the LED off, which validates that the Stop input was correctly wired and mapped within the system.

Throughout the testing process, the physical hardware and software execution remained consistent with the theoretical behaviour of a traditional PLC-based Start–Stop circuit. This shows that OpenPLC provides a dependable platform for translating ladder logic into microcontroller-compatible firmware. The seamless integration also reinforces the concept that a microcontroller like Arduino, when paired with the proper runtime environment, can emulate the behaviour of industrial PLCs at a basic level. However, minor limitations were observed, particularly related to the nature of mechanical switches. The push buttons used in the circuit are susceptible to switch bounce, which could cause momentary fluctuations in the input readings. While these did not significantly affect the performance during the experiment, they present a potential source of error in more sensitive applications. In addition, the overall success of the system depended heavily on accurate pin addressing;

incorrect mapping between variables and physical pins would have caused the circuit to malfunction. Despite these limitations, the experiment successfully validated both the ladder logic design and the interaction between the PLC software environment and the physical Arduino hardware.

9.0 CONCLUSION

In conclusion, the experiment successfully achieved its objective of creating, simulating, and implementing a Start–Stop control system using ladder logic in the OpenPLC Editor and deploying it onto an Arduino microcontroller. The system behaved exactly as expected, with the LED turning on when the Start button was pressed, staying latched on after the button was released, and turning off immediately when the Stop button was activated. These outcomes confirm the hypothesis that the ladder logic design would perform correctly both in simulation and in the physical circuit. More importantly, the experiment demonstrated the practicality of using OpenPLC to bridge industrial PLC concepts with accessible microcontroller platforms. This highlights the broader application potential of such systems, especially in educational environments where students can learn real industrial control principles using affordable hardware. Overall, the experiment reinforced fundamental concepts in PLC programming, digital IO mapping, and control circuitry behaviour, proving the reliability and adaptability of the OpenPLC-Arduino integration.

10.0 RECOMMENDATIONS

For future work, the experiment can be improved by incorporating hardware or software debounce techniques to minimize false triggering caused by mechanical switch bounce. This would ensure cleaner input signals and more reliable system performance. It is also recommended that students explore additional PLC elements such as timers, counters, and analog-based control to expand their understanding of ladder logic applications. Improving the circuit layout with clearer wiring or labelled components could help reduce confusion during assembly and troubleshooting. Furthermore, experimenting with Ethernet/IP communication or linking the Arduino PLC runtime to a supervisory computer would provide valuable exposure to more advanced industrial communication systems. Students attempting similar experiments in the future should carefully verify all pin assignments before uploading their programs, as incorrect mapping remains one of the most common sources of error. Overall, by applying these improvements, the experiment can become even more robust, educational, and reflective of practical industrial control environments.

11.0 REFERENCES

- *Autonomy – open-source PLC software*. (n.d.). https://autonomylogic.com/
- Wilcher, D. D. (2022, August 30). *PLC Ladder Logic on an Arduino: Introduction to OpenPLC*. Control.com. https://control.com/technical-articles/plc-ladder-logic-on-an-arduino-introduction-to-openplc/

12.0 APPENDICES

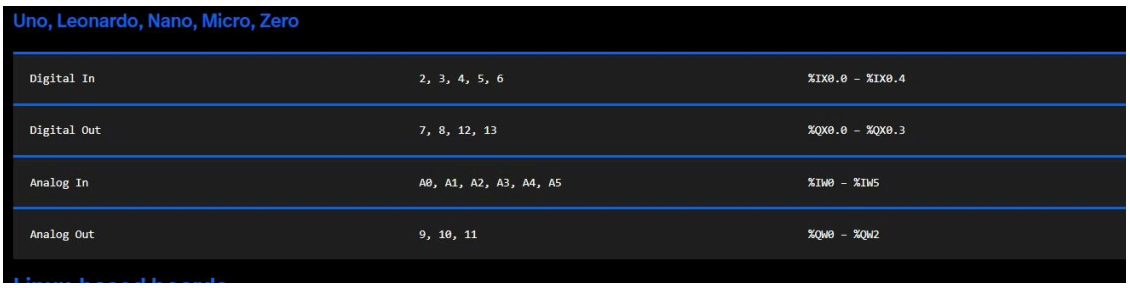

Uno, Leonardo, Nano, Micro, Zero

Digital In	2, 3, 4, 5, 6	%IX0.0 – %IX0.4
Digital Out	7, 8, 12, 13	%QX0.0 – %QX0.3
Analog In	A0, A1, A2, A3, A4, A5	%IW0 – %IW5
Analog Out	9, 10, 11	%QW0 – %QW2

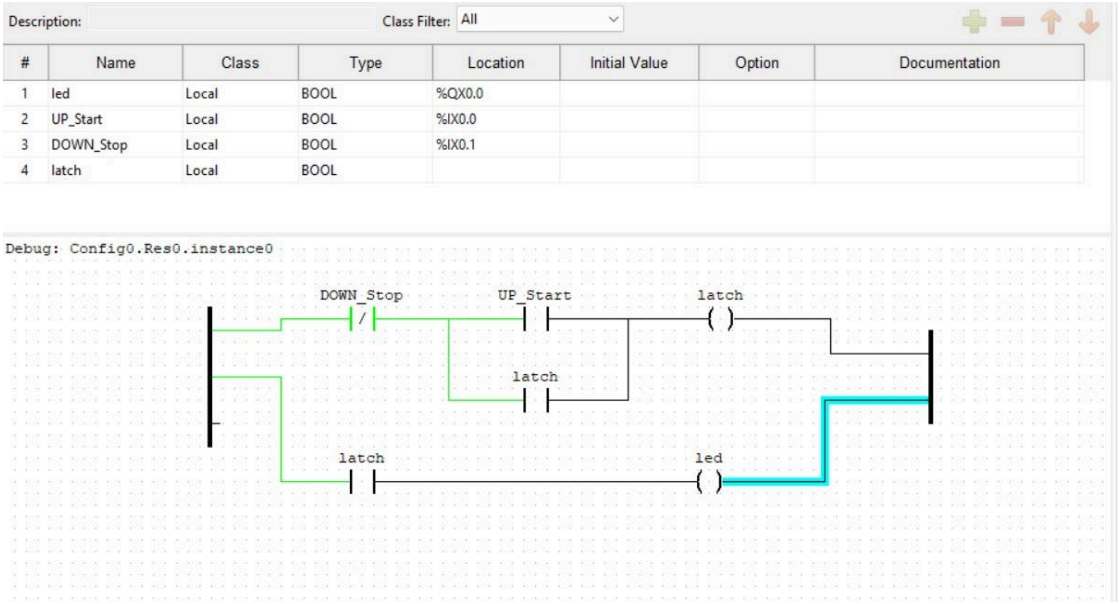

Description: Class Filter: All

#	Name	Class	Type	Location	Initial Value	Option	Documentation
1	led	Local	BOOL	%QX0.0			
2	UP_Start	Local	BOOL	%IX0.0			
3	DOWN_Stop	Local	BOOL	%IX0.1			
4	latch	Local	BOOL				

Description: Class Filter: All

#	Name	Class	Type	Location	Initial Value	Option	Documentation
1	led	Local	BOOL	%QX0.0			
2	UP_Start	Local	BOOL	%IX0.0			
3	DOWN_Stop	Local	BOOL	%IX0.1			
4	latch	Local	BOOL				

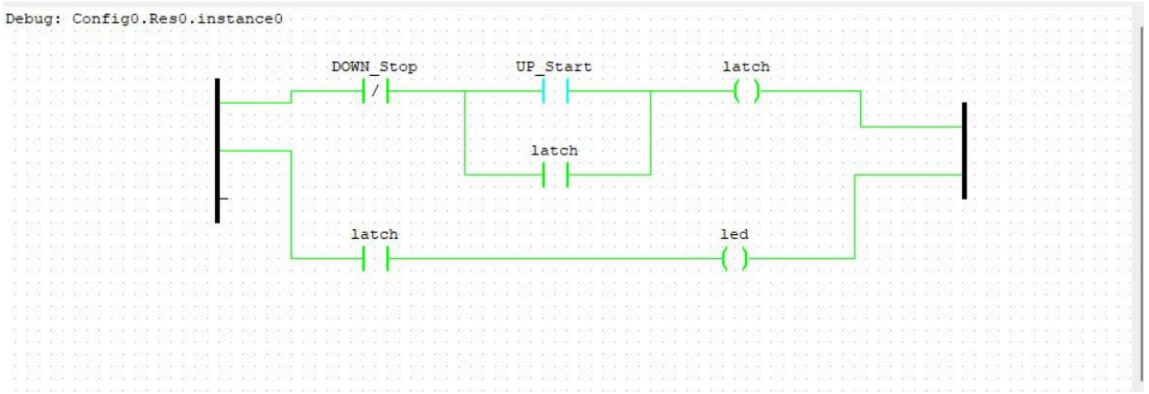

Description: Class Filter: All

#	Name	Class	Type	Location	Initial Value	Option	Documentation
1	led	Local	BOOL	%QX0.0			
2	UP_Start	Local	BOOL	%IX0.0			
3	DOWN_Stop	Local	BOOL	%IX0.1			
4	latch	Local	BOOL				

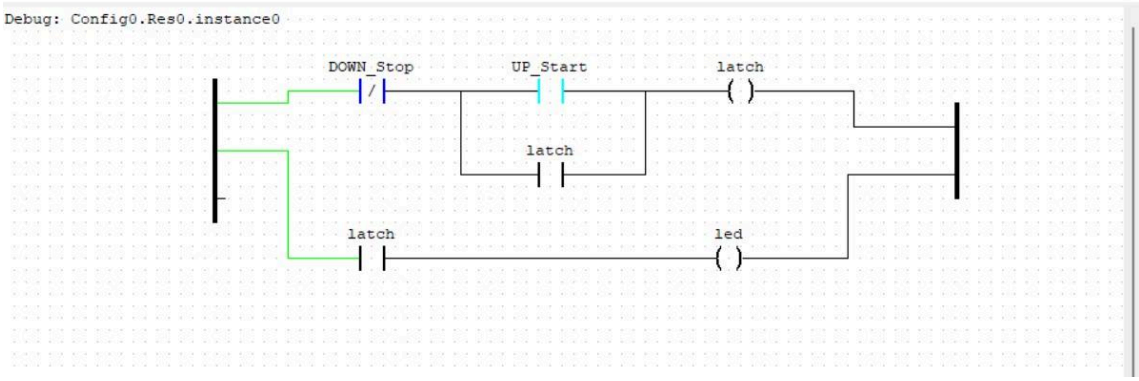

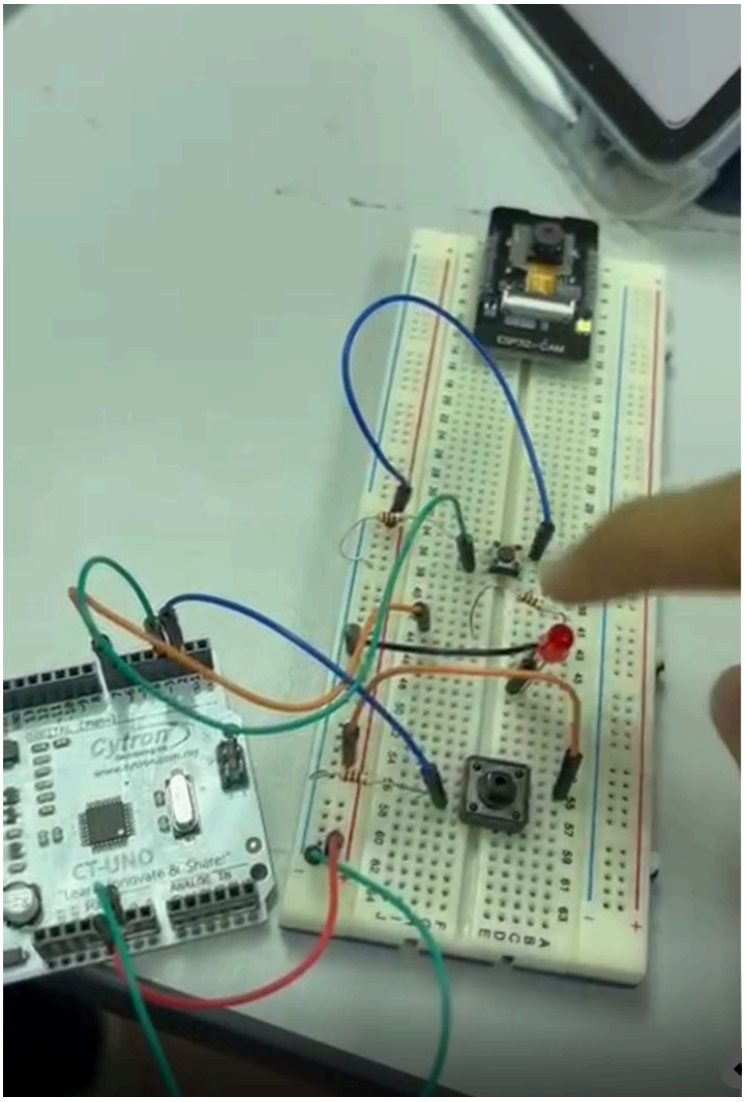
Cytron
CT-UNO

13.0 ACKNOWLEDGEMENT

We would like to express our gratitude to my lab instructor, Dr Zulkifli bin Zainal Abidin, for his guidance during the experiment. Special thanks to my groupmates and peers for their collaboration and help during circuit setup and troubleshooting.

14.0 STUDENTS DECLARATION

CERTIFICATE OF ORIGINALITY AND AUTHENTICITY

This is to certify that we are responsible for the work submitted in this report, that the original work is our own except as specific in references and acknowledgement, and that the original work contained herein have not been untaken or done by unspecified sources or a person.

We hereby certify that this report has not been done by only one individual and all of us have contributed to the report. The length of contribution to the reports by each individual is noted within this certificate.

We also hereby certify that we have read and understand the content of the total report and no further improvement on the reports is needed from any of the individual's contributors to the report.

We, therefore, agreed unanimously that this report shall be submitted for marking and this final printed report has been verified by us.

Signature:
Name: Adam Nabil Haniff bin Ruzaimi
Matric Number: 2313203
Contribution: Introduction, equipments and results

Read /
Understand /
Agree /

Signature:
Name: Muhammad Naufal Hakimi bin Irwan Affandi
Matric Number: 2313041
Contribution: Procedure, results, discussion

Read /
Understand /
Agree /

Signature:
Name: Muhamad Iqbal bin Md Isa
Matric Number: 2313247
Contribution: : Results, discussion, conclusion

Read /
Understand /
Agree /